RFM Series

In-Tank Return Line Filters

145 psi • up to 224 gpm



Features

- The compact and lightweight design make RFM filters especially suitable for mobile applications.
- RFM filters are constructed of polyamide plastic housing and lid.
- RFM 90/150/210/270 drop in replacement for "Tank Topper" filters.
- Sizes 50 - 851 aluminum alloy is water tolerant - anodization is not required for water based fluids (HWBF).
- The filter bowl on models 50 - 270 also serves as a contamination basket - removed to change element.
- Models 330, 500, 661, and 851 have filter elements equipped with separate, reusable contamination baskets.
- Sizes 75/90/150/165/185 available with 4- or 2-bolt tank flange.
- Second inlet optional port available for sizes 75, 165, 185 only with 4-bolt mounting head.
- Sizes 975 & 1100 added for increased flow capacities
- Sizes 50, 975 and 1100 utilize separate bypass assemblies
- Size 50 only available with BN4HC elements

Note: This filter is configured with an .....R.... type (return/low pressure) element, so if the filter requires a bypass, the bypass is located in the closed end cap of the cartridge element. *(Exception - sizes 50, 975, 1100)*

Consult HYDAC for applications using RFM50. RFM50 is not a standard offering.

Applications



Agricultural



Automotive



Construction

Hydraulic Symbol

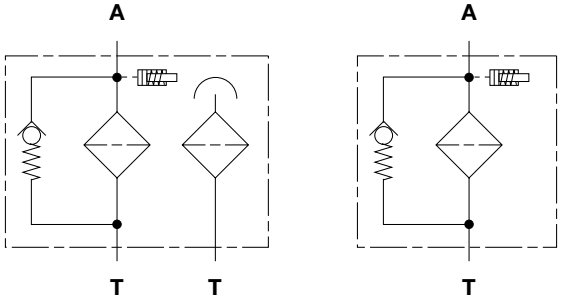

Technical Specifications

Mounting Method			
75/90/150/165/185	2 mounting holes - filter housing		
50/75/90/150/165/185/210/270/330/500/661/851/975/1100	4 mounting holes - filter housing		
Port Connections	Inlet / Outlet		
50	SAE-8 / 0.9"		
90/150	SAE-12 / 1"		
75/165/185	SAE-16 / 1.26" Smooth Port		
210/270	SAE-20 / Open Bottom		
330/500	SAE-24 / 2" NPT 1 1/2" SAE Flange, Code 61 / 2" NPT		
661/851	2 1/2" SAE Flange, Code 61 / G 2		
975/1100	1/2" BSPP 2" SAE Straight Thread / 2" NPT 2 1/2" NPT Threaded / 2" NPT M 2 1/2" SAE Code 61 Flange / 2" NPT M		
Direction of Flow	Side inlet and bottom outlet.		
Mat. of Construc.	Head	Bowl	Lid
50/90/150/75/165/185	Aluminum	Polyamide	Polyamide
210/270	Aluminum	Steel	Polyamide
330/500/661/851	Aluminum	Polyamide	Aluminum
975/1100	Aluminum	Steel	Steel
Flow Capacity			
50 - 13 gpm (50 lpm)	270 - 71 gpm (270 lpm)		
75 - 20 gpm (75 lpm)	330 - 87 gpm (330 lpm)		
90 - 24 gpm (90 lpm)	500 - 132 gpm (500 lpm)		
150 - 40 gpm (150 lpm)	661 - 174 gpm (660 lpm)		
165 - 43 gpm (165 lpm)	851 - 225 gpm (850 lpm)		
185 - 49 gpm (185 lpm)	975 - 258 gpm (950 lpm)		
210 - 55 gpm (210 lpm)	1100 - 300 gpm (1100 lpm)		
Housing Pressure Rating			
Max. Allowable Working Pressure*	145 psi (10 bar), 101.5 psi (7 bar) *(Sizes 975 & 1100)*		
Fatigue Pressure	145 psi (10 bar) @ 1 million cycles		
Burst Pressure	75-500	>580 psi (40 bar)	
	50, 661/851	536 psi (37 bar)	
	975/1100	Consult Factory	
Element Collapse Pressure Rating			
BN4HC *(size 975 & 1100 only)*	145 psid (10 bar)		
SN *(size 50-851 only)*, W/HC	290 psid (20 bar)		
ECON2, BN4AM, AM, P/HC, MM	145 psid (10 bar)		
V	435 psid (30 bar)		
Fluid Temperature Range	-22°F to 212°F (-30°C to 100°C)		
Consult HYDAC for applications below -22°F (-30°C)			
Fluid Compatibility			
Compatible with all hydrocarbon based, synthetic, water glycol, oil/water emulsion, and high water based fluids when the appropriate seals are selected.			
Indicator Trip Pressure			
P = 20 psi (1.4 bar) - 10% P = 29 psi (2 bar) -10% *(standard)* P = 72 psi (5 bar) -10% *(optional)*			
Bypass Valve Cracking Pressure			
ΔP = 43 psid (3 bar) +10% *(Standard - All sizes except 50, 975, 1100)* ΔP = 87 psid (6 bar) +10% *(Optional - Sizes 50, 975 & 1100 not available)* ΔP = 25 psid (1.7 bar) +10% *(Standard for Sizes 50, 975 & 1100)*			

*Note: All RFM Filters MAWP reduce to 7 bar (101.5 psi) when using the following "VMF" and "VR" indicators: B, BM, E, ES, GC, LE, LZ.

Model Code

RFM SN 330 B F F 3 D 1 . X / 12 - V - _ - L24

Filter Type
RFM = In-Tank Return Line Filter

Element Media
SN = Sustainmicron
BN/AM = Betamicron®/Aquamicron® *(Sizes 330 to 851 only)*
ECON2 = ECOmicron® *(Not for sizes 50, 75, 210, 270)*
AM = Aquamicron® *(Sizes 330 to 851 only)*
W/HC = Wire Mesh *(Sizes 75 to 851)* P/HC = Polyester *(Sizes 330 to 851 only)*
MM = Mobilemicron® *(Sizes 75 to 851)*

Size
50, 75, 90, 150, 165, 185, 210, 270, 330, 500, 661, 851, 975, 1100

Working Pressure
B = 145 psi (10 bar) V = 101.5 psi (7 bar) *(975 & 1100 Standard* - Note previous page)*

Optional Second Inlet Connection
(omit) = no second port
D = 1" Threaded (SAE-16) *(sz. 75, 165, 185)*
F = 1 1/2" Threaded (SAE-24) *(sz. 330, 500 only)*
G = 2" Threaded Port *(sz. 975, 1100 only)*
K = 1 1/2" SAE Flange Code 61 *(sz. 330, 500 only)*
M = 2 1/2" SAE Flange Code 61 *(sz. 661, 851, 975 & 1100 only)*
N = 2 1/2" NPT Threads *(sz. 975, 1100 only)*

Inlet Connection/Port Size *(1 Inlet)*
B = 1/2" Threaded (SAE-8) *(sz. 50 only)*
C = 3/4" Threaded (SAE-12) *(sz. 90, 150 only)*
D = 1" Threaded (SAE-16) *(sz. 75, 165 & 185 only*
E = 1 1/4" Threaded (SAE-20) *(sz. 210, 270 only)*
F = 1 1/2" Threaded (SAE-24) *(sz. 210, 270, 330, & 500 only)*
G = 2" Threaded Port *(sz. 975 & 1100 only)*
K = 1 1/2" SAE Flange Code 61 *(sz. 330, 500 only)*
M = 2 1/2" SAE Flange Code 61 *(sz. 661, 851, 975 & 1100 only)*
N = 2 1/2" NPT Threads *(sz. 975, 1100 only)*
Z = Customer Specific

Filtration Rating *(microns)*
3, 5, 10, 20 = SN
40 = AM
3, 5, 10, 20 = BN/HC
25, 50, 100, 200 = W/HC
3, 10 = BN/AM
10, 20 = P/HC
3, 5, 10, 20 = ECON2
10, 15 = MM

Type of Static Clogging Indicator
A, B, BM, C, D, E, F, FD *(Others available upon request, see Clogging Indicators section.)*

Type Number
0 = no indicator, no ports 1-3 = clogging indicator positions *(see chart)*

Modification Number *(latest version always supplied)*

Inlet Port Configuration
0 = BSPP Straight Thread Ports
12 = SAE Straight Thread O-Ring Boss Ports *(sz. 50-500, 975, 1100)*
3 = NPT Ports *(sizes 975, 1100 only)*
16 = SAE Flange Code 61 *(sz. 330-851, 975, 1100)*

Seals
(omit) = Nitrile rubber (NBR) *(standard)* V = Fluorocarbon elastomer (FKM)

Bypass Valve
(omit) = 43 psid (3 bar) *(standard)*
B1 = 14.5 psid (1 bar) lube or coolant
B1.7 = 25 psid (1.7 bar) *(50, 975 & 1100 only setting available for bypass)*
B6 = 87 psid (6 bar) *(return line extended life)*
KB = no bypass *(flushing systems)*
not available with ECON2

Supplementary Details
L24, L48, L110, L220 = Lamp for D-type clogging indicator *(LXX, XX = voltage)*
T = Filter Breather *(sz. 75, 90, 150, 165, 185, 210, 270 only) - (includes oil separator on 2 bolt versions sizes 75, 165, 185 only)*
C = Outlet check valves *(sizes 975, 1100 only)*
DTxx = Down tube *(xx length in inches - up to 12 inches)*
D = Diffuser *(sizes 75, 165, 185 only)*
G = BSPP threaded outlet
SO882 = Quality Protection Design
SO263 = Modification of elements for Skydrol or HYJET phosphate ester fluids (sizes 75 - 851 only)
4L = 4 Bolt mounting flange *(sizes 90-185)*
2M0 = Indicator with Deutsch Connector *(FD indicator only)*
SFREE = Element specially designed to minimize electrostatic charge generation
SO376 = Modification of ON and W/HC elements for HFA, HFB, HFC, and HFD flame retardant liquids

Replacement Element Model Code

0330 R 003 SN / V B6

Size
0050, 0075, 0090, 0150, 0165, 0185, 0210, 0270, 0330, 0500, 0660, 0850, 0975, 1100

Filtration Rating *(micron)*
3, 5, 10, 20 = SN
3, 5, 10, 20 = BN4HC *(sz. 975, 1100 only)*
3, 10 = BN4AM
40 = AM
10, 20 = P/HC
3, 5, 10, 20 = ECON2
25, 50, 100, 200 = W/HC
10, 15 = MM

Element Media
SN, BN4HC, BN4AM, ECON2, AM, W/HC, P/HC, MM

Seals
(omit) = Nitrile rubber (NBR) *(standard)*
V = Fluorocarbon elastomer (FKM)

Bypass Valve
(omit) = 43 psid (3 bar) *(standard)*
B1.7 = 25 psid (1.7 bar)
KB = no bypass
B1 = 14.5 psid (1 bar)
B6 = 87 psid (6 bar)

Supplementary Details
SFREE = *(same as above)*
SO882 = *(same as above)*
SO376 = *(same as above)*
SO263 = *(same as above*

Clogging Indicator Model Code

VR 2 D . X / _ V

Indicator Prefix
VR = Return Filters *(sizes 330 to 851)*
VMF = Mobile Filters *(sizes 75 to 270)*
VMF/-3= Return Filters *(sizes 975 to 1100)*

Trip Pressure
1.4 = 20 psid (1.4 bar) 2 = 29 psid (2 bar)
5 = 72 psid (5 bar) *(optional)*

Type of Indicator
A = No indicator, plugged port
B = Pop-up indicator *(auto reset - static only)*
BM = Pop-up indicator *(manual reset)*
C = Electric switch - SPDT
D = Electric switch and LED light – SPDT
E = Visual pressure gauge
F = Electric pressure switch
FD = Electric pressure switch w/Deutsch Connector

Modification Number

Supplementary Details
2M0 = Deutsch Connector *(male)*

Seals
(omit) = Nitrile rubber (NBR) *(standard)*
V = Fluorocarbon elastomer (FKM)

(For additional details and options, see Clogging Indicators section.)

Model Codes Containing RED are non-stock items — Minimum quantities may apply – Contact HYDAC for information and availability

Clogging Indicator Locations

RFM 75/165/185

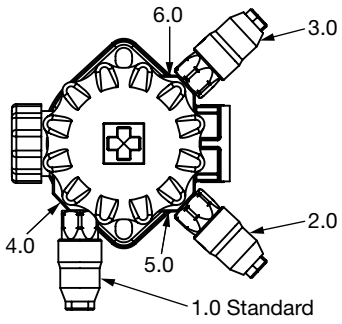

RFM 75/165/185 (2 Bolt Mount)

Type No.	Location of Clogging Indicator	Indicator Model
1.X	Clogging Indicator left back 90° to Inlet	VMF...
2.X	Clogging Indicator left front 45° to Inlet	VMF...
3.X	Clogging Indicator right front 45° to Inlet	VMF...
4.X	Clogging Indicator left back 135° to Inlet	VMF...
5.X	Clogging Indicator left front 90° to Inlet	VMF...
6.X	Clogging Indicator right front 90° to Inlet	VMF...

RFM 75/165/185/-4L

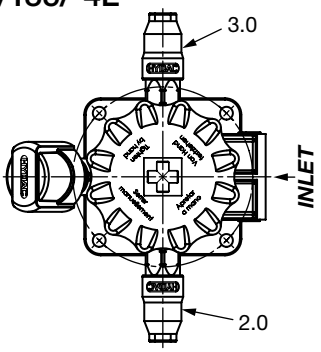

RFM 75/165/185 - Single Port (4 Bolt Mount)

Type No.	Location of Clogging Indicator	Indicator Model
2.X	Clogging Indicator left front 90° to Inlet	VMF...
3.X	Clogging Indicator right front 90° to Inlet	VMF...

RFM 75/165/185/-4L - Multi-Port

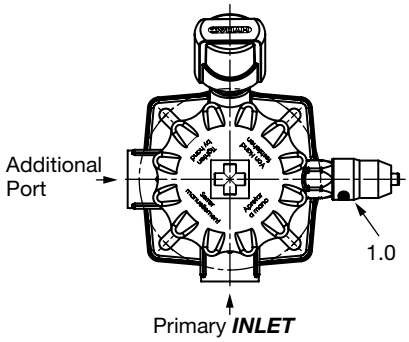

RFM 75/165/185 - Multi-Port (4 Bolt Mount)

Type No.	Location of Clogging Indicator	Indicator Model
1.X	Clogging Indicator right of primary Inlet, 90° to Inlet	VMF...

RFM 90/150

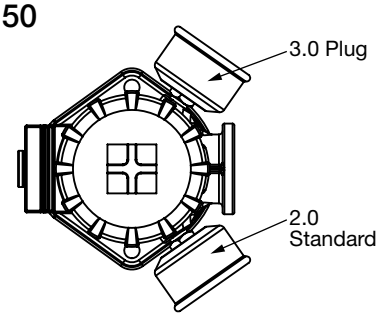

Type No.	Location of Clogging Indicator	Indicator Model
2.X	Clogging Indicator left front 45° to Inlet	VMF...
3.X	Clogging Indicator right front 45° to Inlet	VMF...

RFM 90/150/-4L

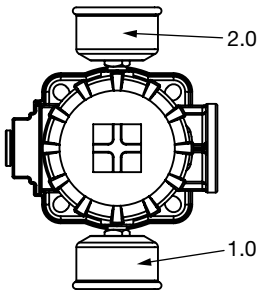

Clogging Indicator Locations (cont'd)

RFM 210/270

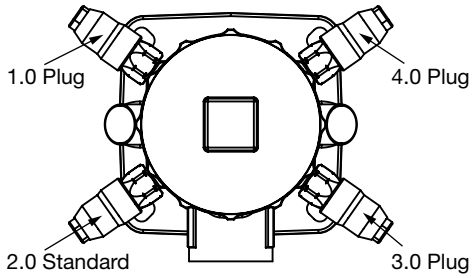

Type No.	Location of Clogging Indicator	Indicator Model
1.X	Clogging Indicator left back 45° to Inlet	VMF...
2.X	Clogging Indicator left front 45° to Inlet	VMF...
3.X	Clogging Indicator right front 45° to Inlet	VMF...
4.X	Clogging Indicator right back 45° to Inlet	VMF...

RFM 330/500

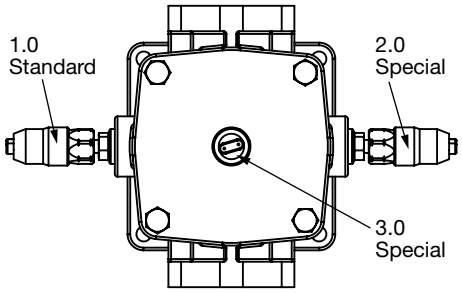

Type No.	Location of Clogging Indicator	Indicator Model
1.X	Clogging Indicator left 90° to Inlet	VR...
2.X	Clogging Indicator right 90° to Inlet	VR...
3.X	Clogging Indicator on Top	VR...

RFM 661/851

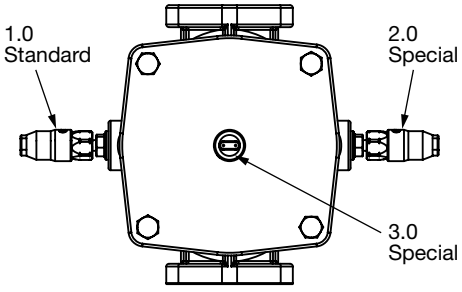

Type No.	Location of Clogging Indicator	Indicator Model
1.X	Clogging Indicator left 90° to Inlet	VR...
2.X	Clogging Indicator right 90° to Inlet	VR...
3.X	Clogging Indicator on Top	VR...

LOW PRESSURE FILTERS

Dimensions

RFM 50 - 4L

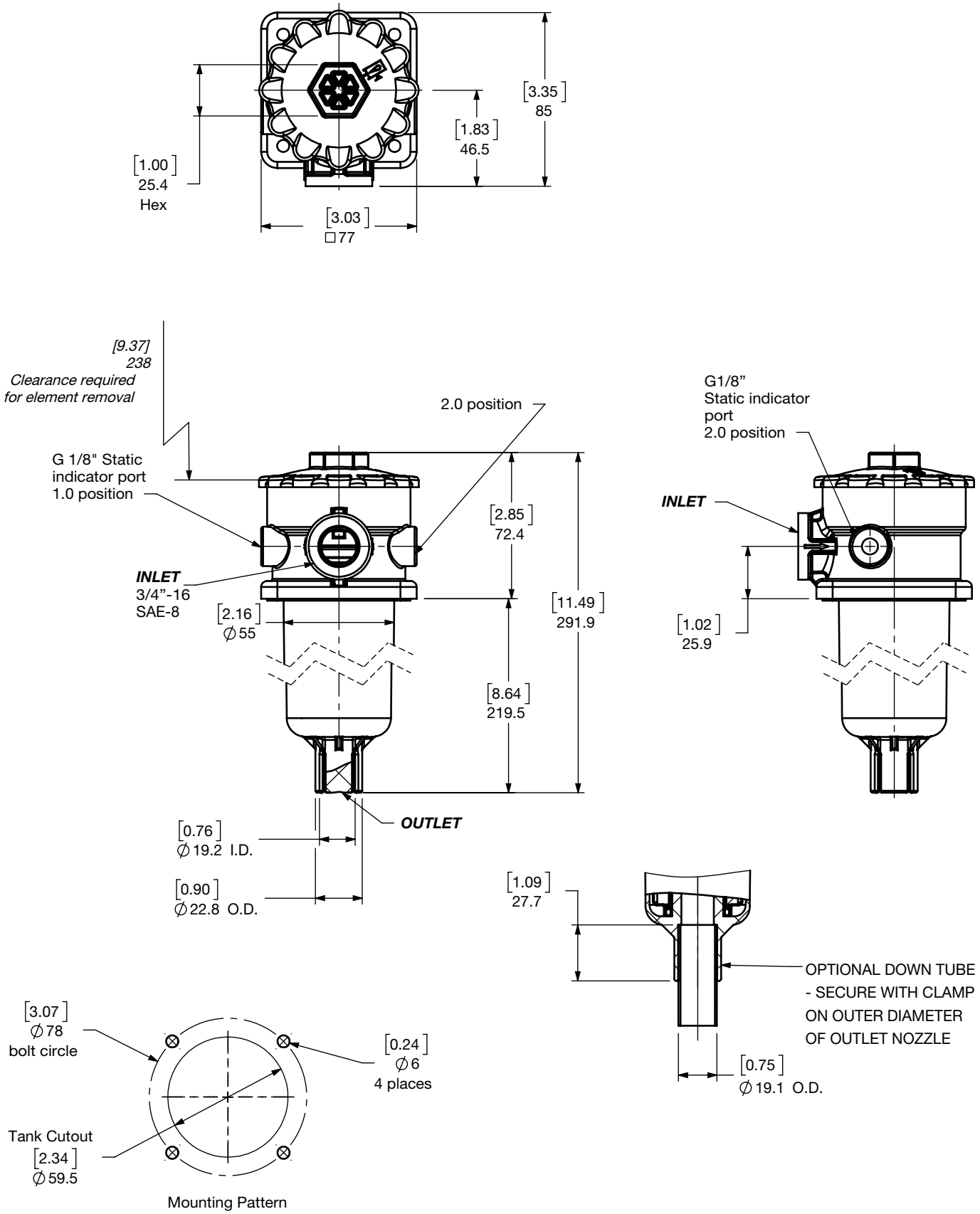

Size	50
Weight (lbs.)	1.5

Dimensions shown are [inches] millimeters for general information and overall envelope size only. Weights listed include element.
For complete dimensions please contact HYDAC to request a certified print.

Dimensions

RFM 75/165/185 (2 Bolt)

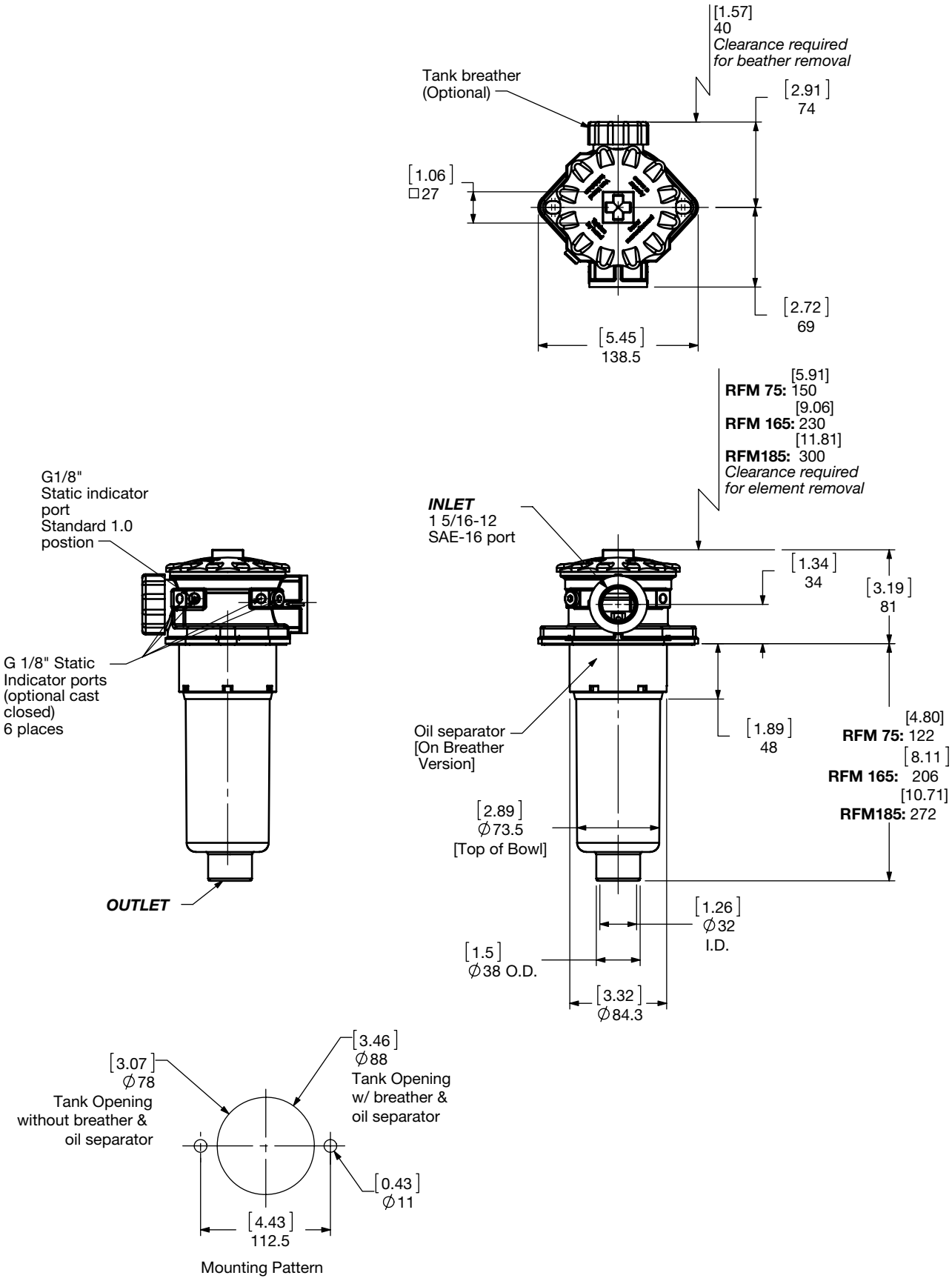

Size	75	165	185
Weight (lbs.)	2.0	2.5	2.6

Dimensions shown are [inches] millimeters for general information and overall envelope size only. Weights listed include element.
For complete dimensions please contact HYDAC to request a certified print.

Dimensions

RFM 75/165/185 - 4L Single Port (4 Bolt)

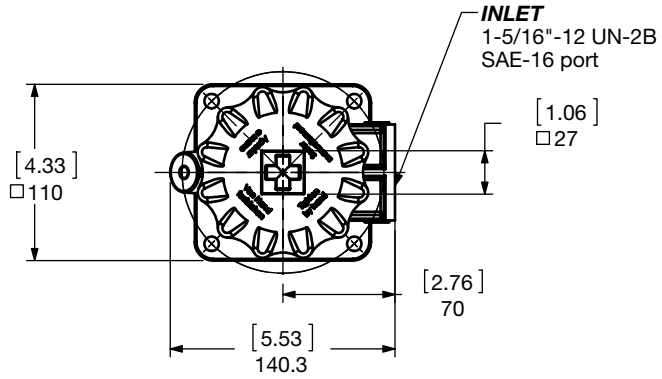

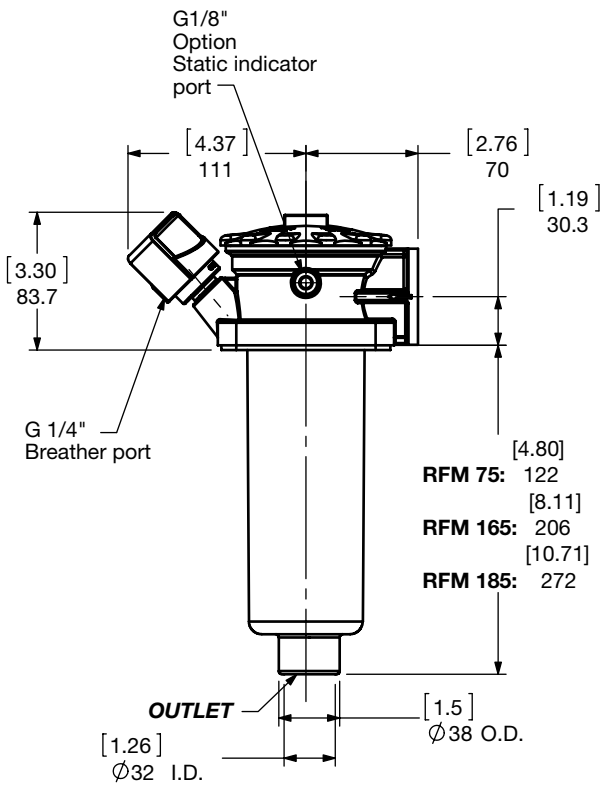

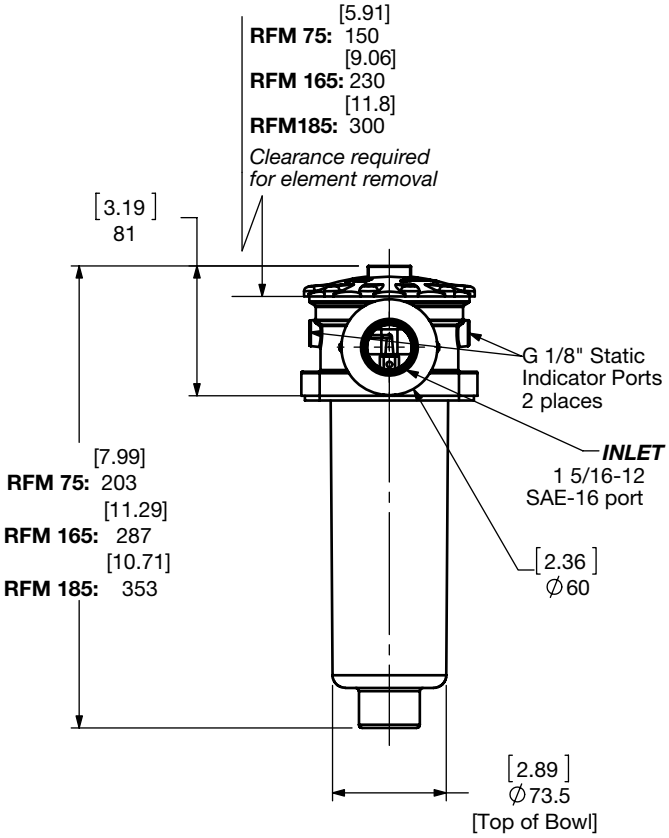

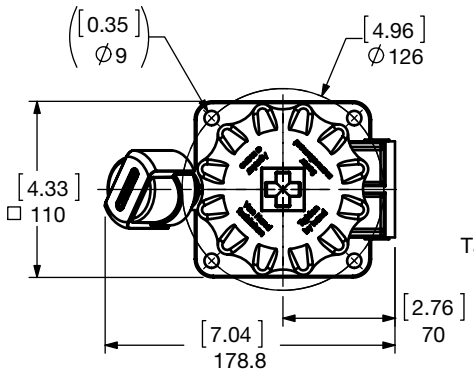

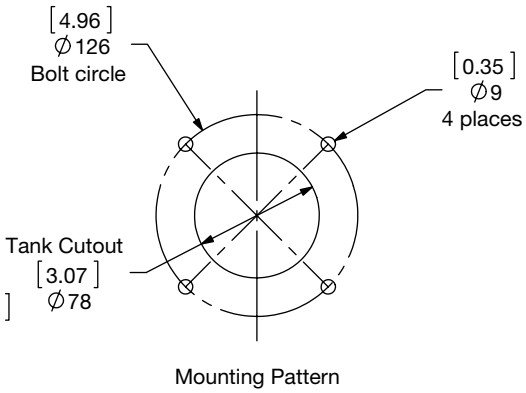

Mounting Pattern

Note: Breather (BF10
With Anti Splash)

Size	75	165	185
Weight (lbs.)	2.0	2.5	2.6

Dimensions shown are [inches] millimeters for general information and overall envelope size only. Weights listed include element.
For complete dimensions please contact HYDAC to request a certified print.

Dimensions

RFM 75/165/185 - 4L Multi Port (4 Bolt)

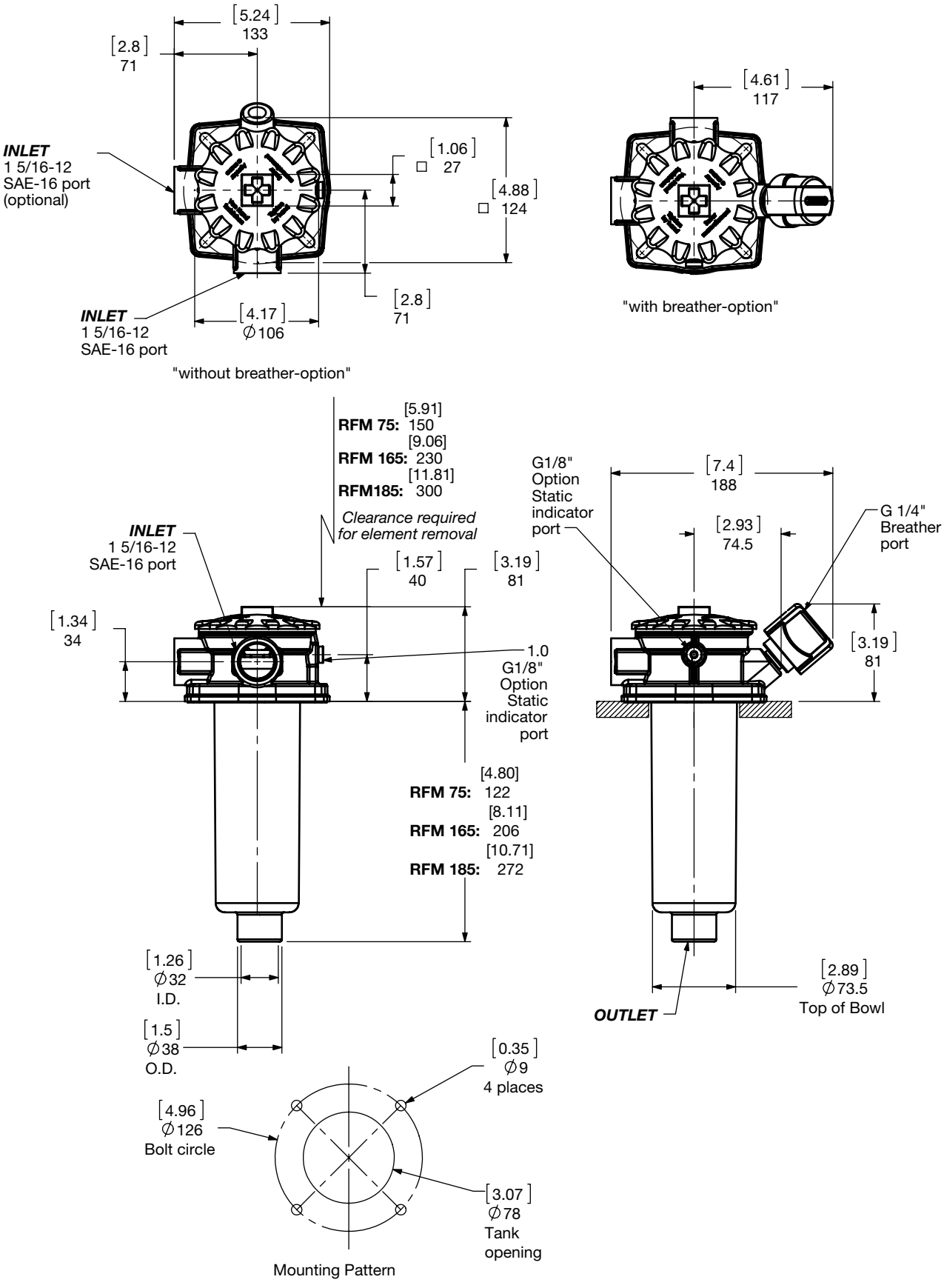

Size	75	165	185
Weight (lbs.)	2.0	2.5	2.6

Dimensions shown are [inches] millimeters for general information and overall envelope size only. Weights listed include element.
For complete dimensions please contact HYDAC to request a certified print.

Dimensions

RFM 90-150 (2 Bolt)

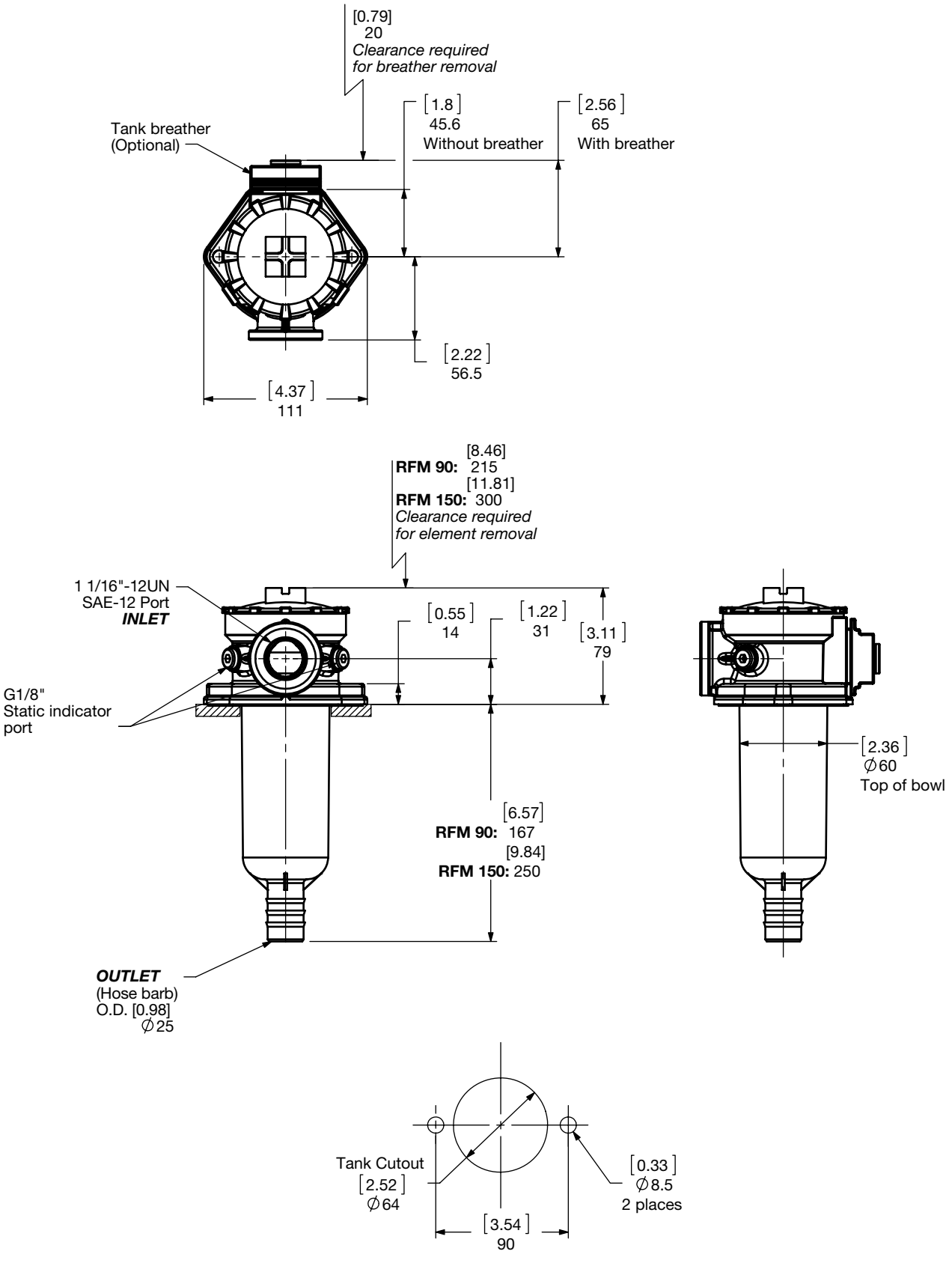

Mounting Pattern

Size	90	150
Weight (lbs.)	1.2	1.7

Dimensions shown are [inches] millimeters for general information and overall envelope size only. Weights listed include element.
For complete dimensions please contact HYDAC to request a certified print.

Dimensions

RFM 90-150 - 4L (4 Bolt)

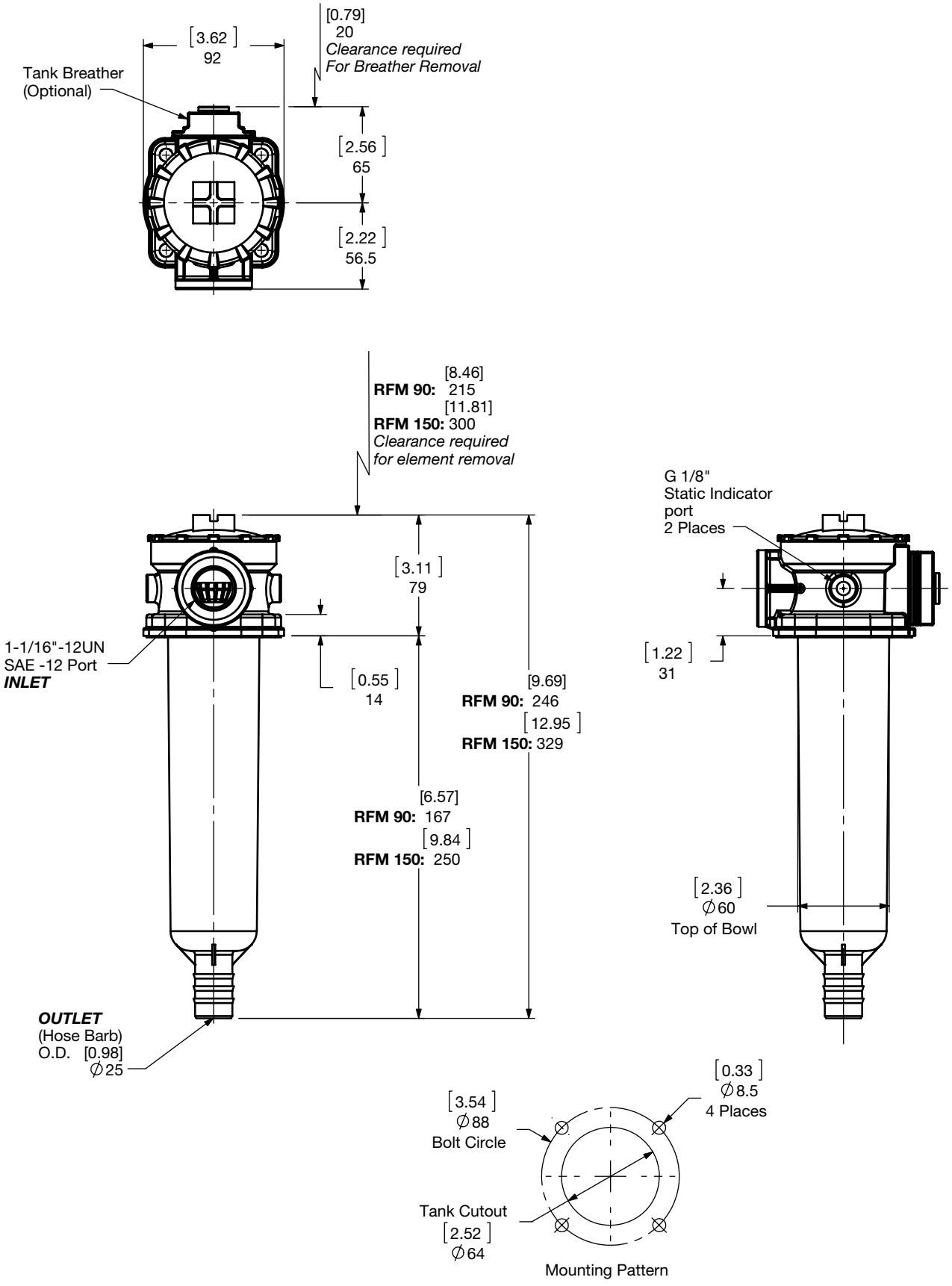

Size	90	150
Weight (lbs.)	1.2	1.7

Dimensions shown are [inches] millimeters for general information and overall envelope size only. Weights listed include element.
For complete dimensions please contact HYDAC to request a certified print.

Dimensions

RFM 210/270

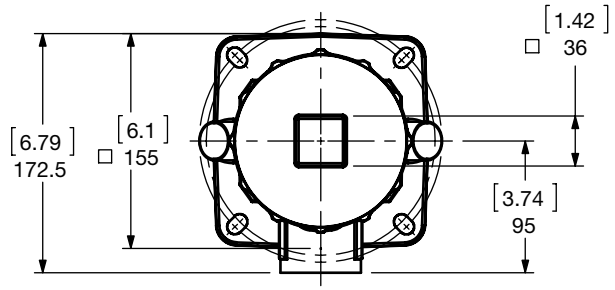

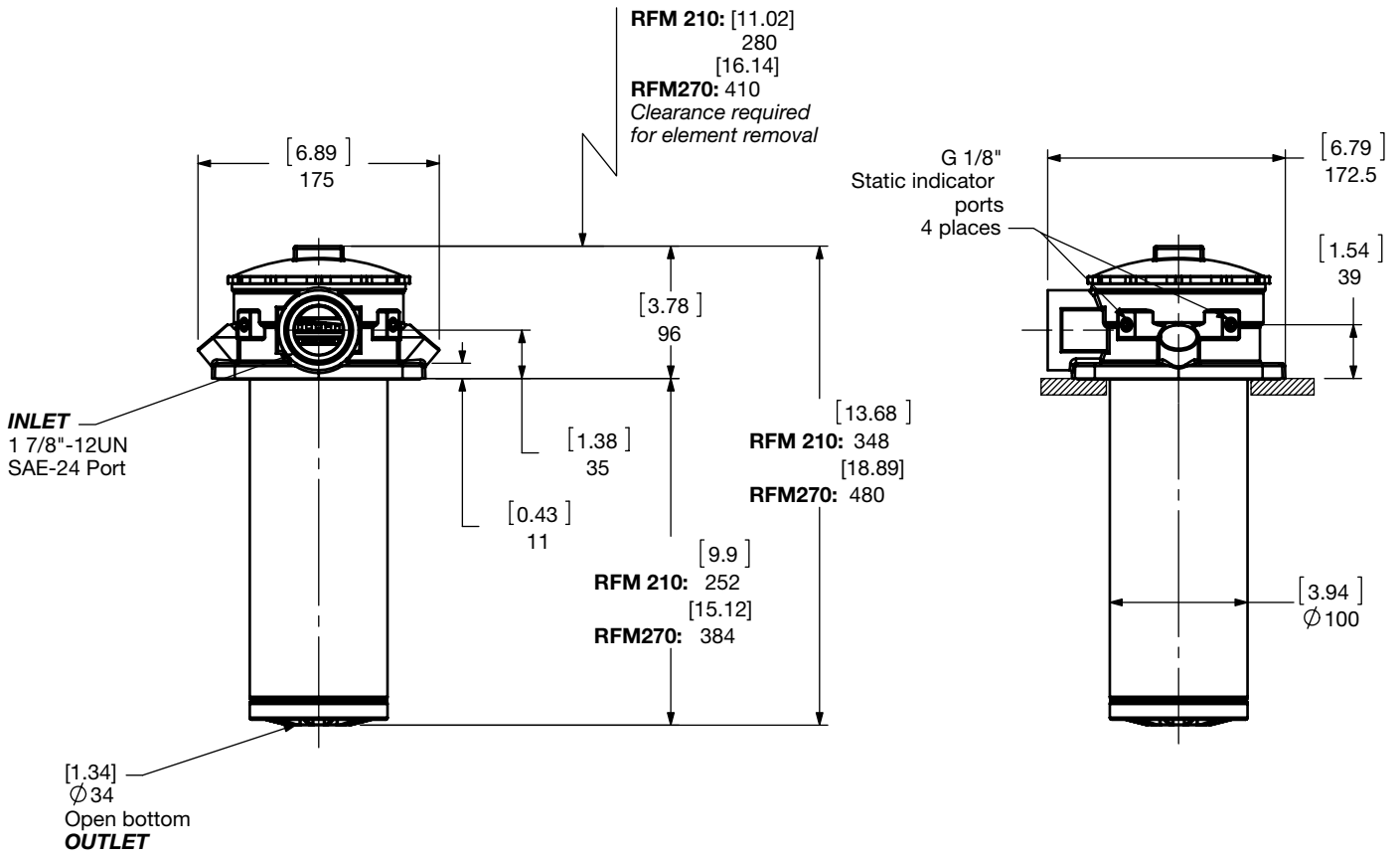

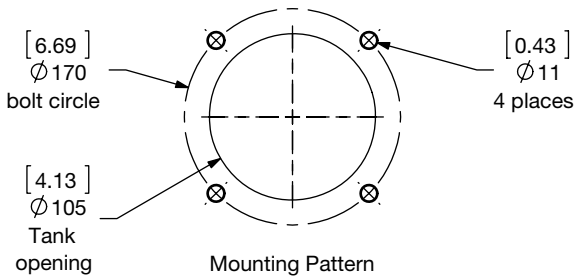

Size	210	270
Weight (lbs.)	7	9.5

Dimensions shown are [inches] millimeters for general information and overall envelope size only. Weights listed include element.
For complete dimensions please contact HYDAC to request a certified print.

Dimensions
RFM 330/500

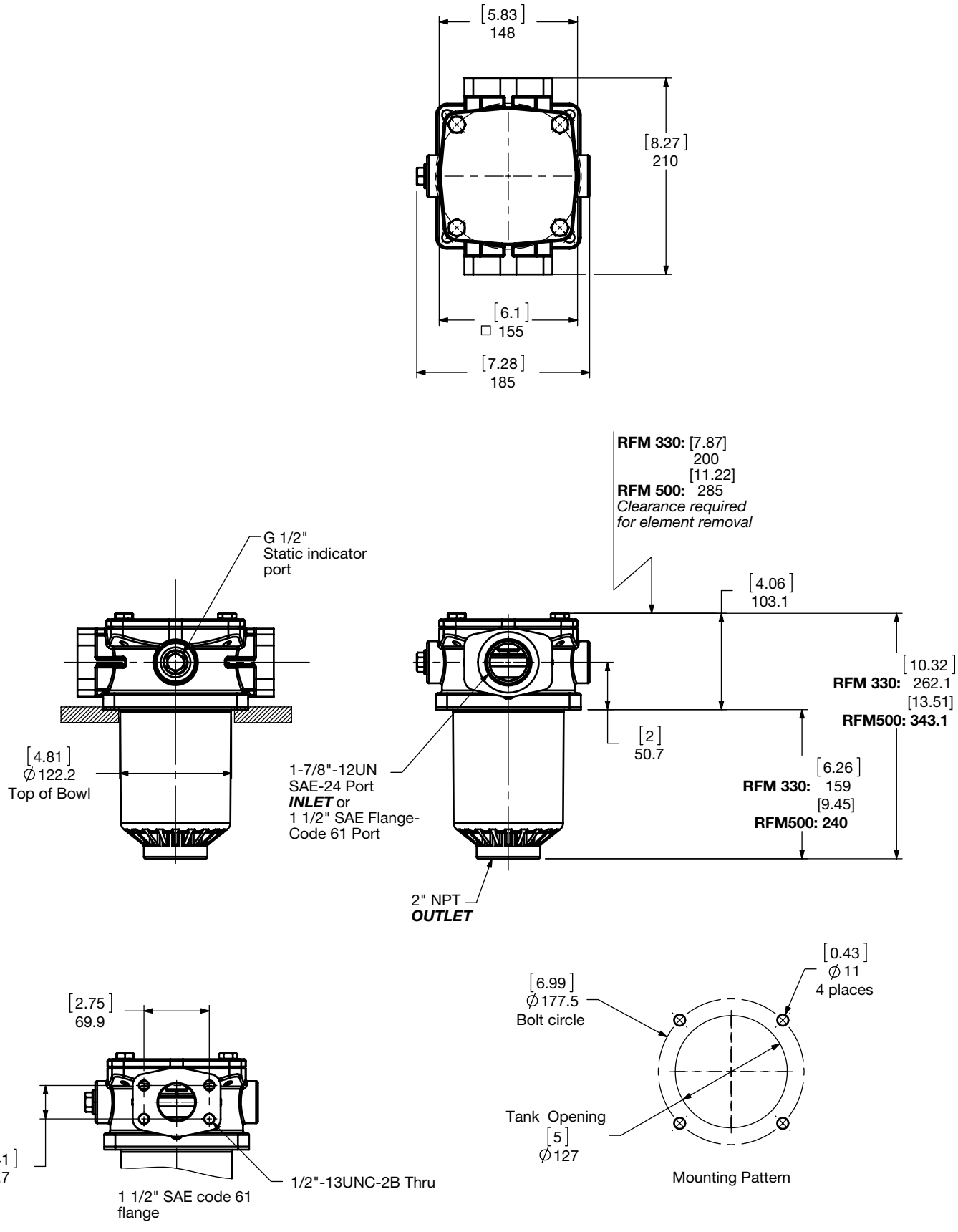

Size	330	500
Weight (lbs.)	8.6	10

Dimensions shown are [inches] millimeters for general information and overall envelope size only. Weights listed include element.
For complete dimensions please contact HYDAC to request a certified print.

Dimensions

RFM 661/851

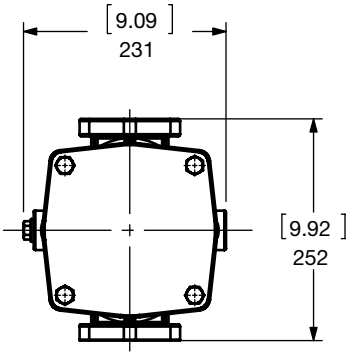

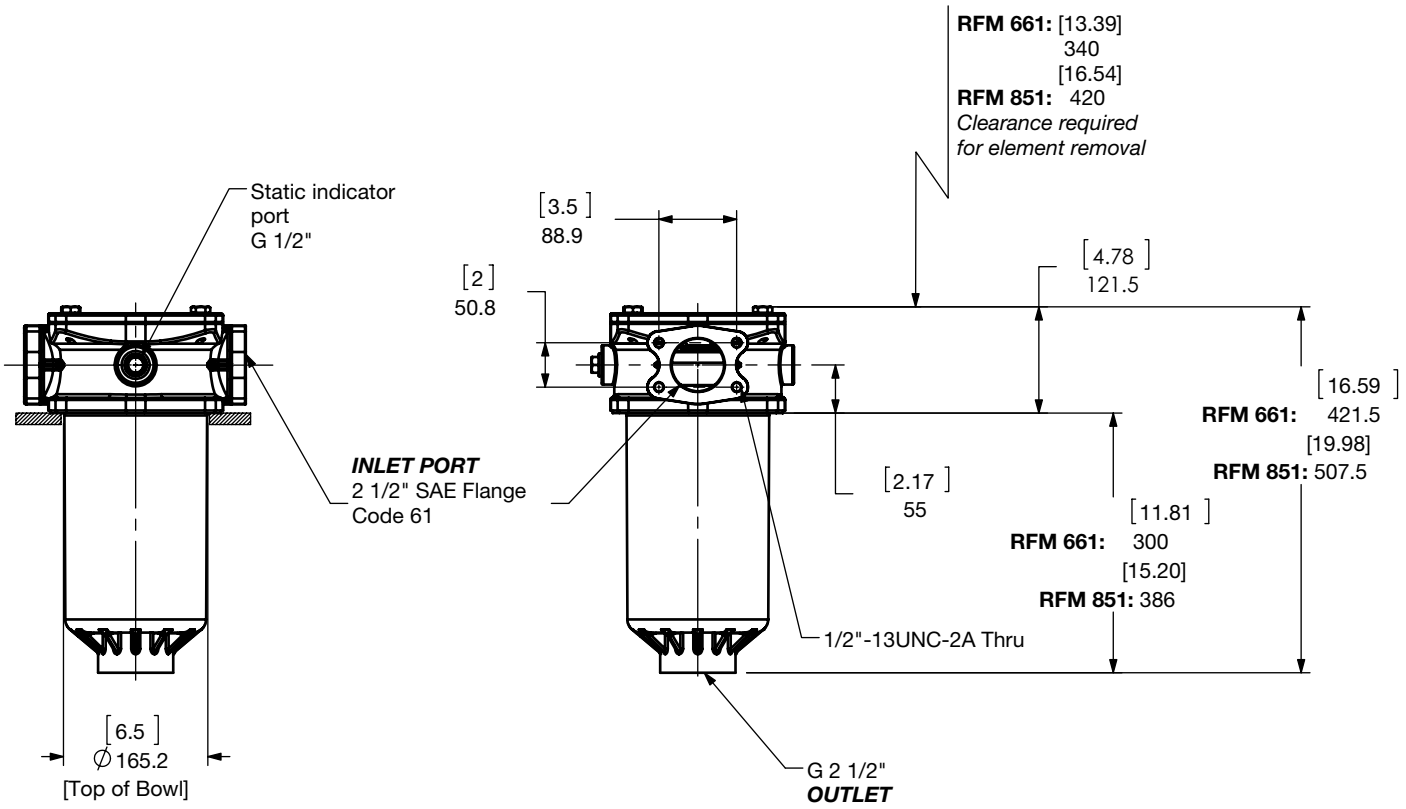

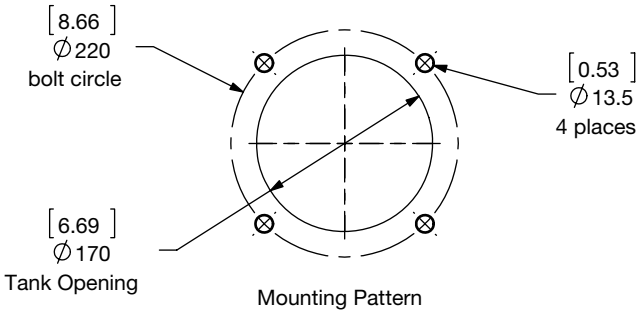

Size	661	851
Weight (lbs.)	19.9	23.2

Dimensions shown are [inches] millimeters for general information and overall envelope size only. Weights listed include element.
For complete dimensions please contact HYDAC to request a certified print.

Dimensions
RFM 975/1100

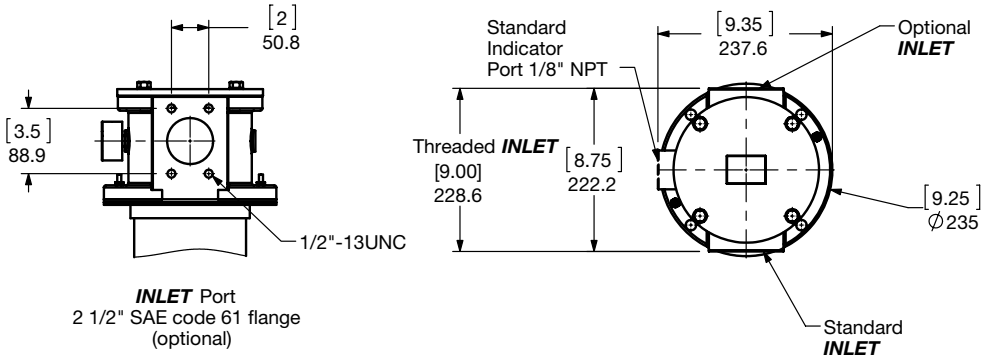

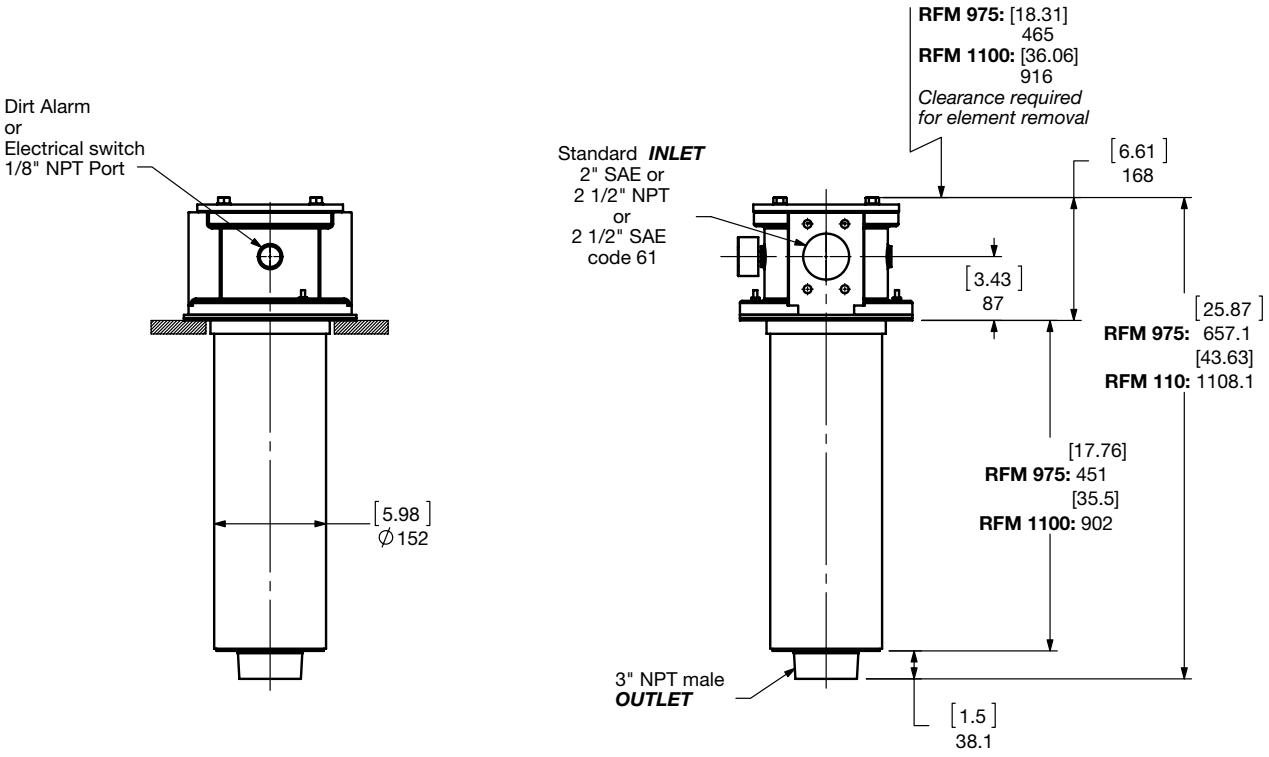

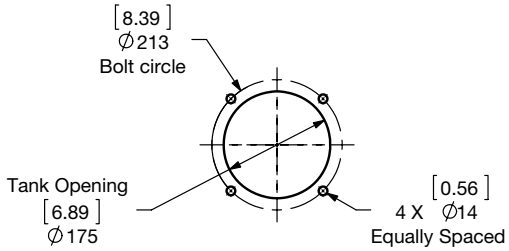

Mounting Pattern

Size	975	1100
Weight (lbs.)	37	52

Dimensions shown are [inches] millimeters for general information and overall envelope size only. Weights listed include element.
For complete dimensions please contact HYDAC to request a certified print.

Sizing Information

Total pressure loss through the filter is as follows:

Assembly ΔP = Housing ΔP + Element ΔP

Housing Curve:

Pressure loss through housing is as follows:

$$\text{Housing } \Delta P = \text{Housing Curve } \Delta P \times \frac{\text{Actual Specific Gravity}}{0.86}$$

Adjustments must be made for viscosity & specific gravity of the fluid to be used! *(see "Sizing HYDAC Filter Assemblies" in Section B - Overview)*

RFM 50/-4L Housing

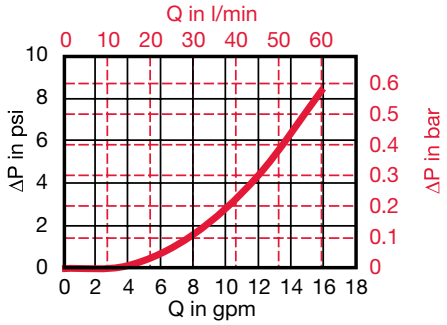

RFM 75/165/185
& RFM 75/165/185/-4L Housing

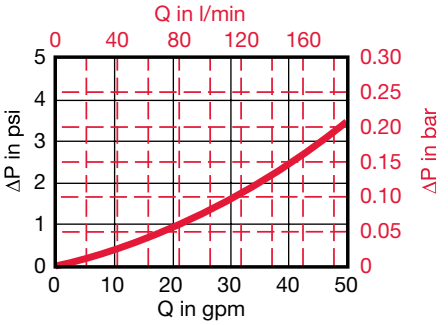

RFM 90/150
& RFM 90/150/-4L Housing

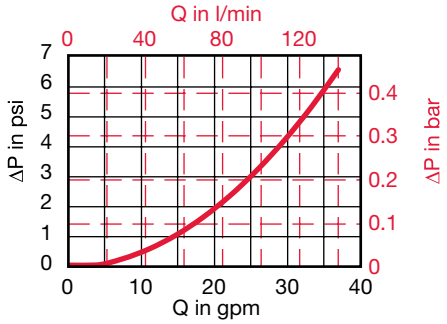

RFM 210 / 270 Housing

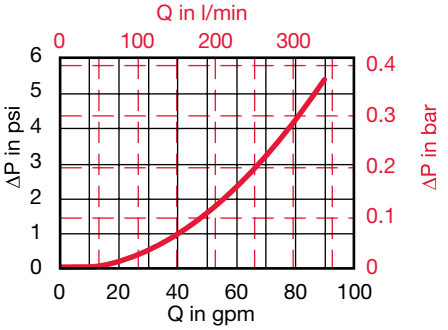

RFM 330/500 Housing

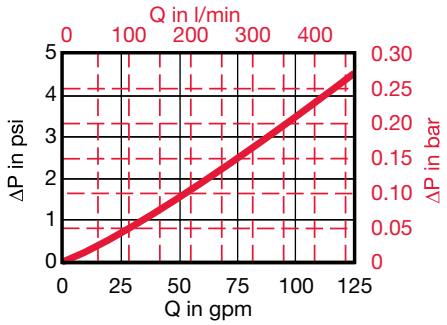

RFM 661/851Housing

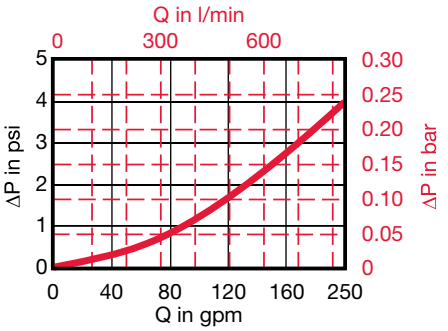

RFM 975 / 1100 Housing

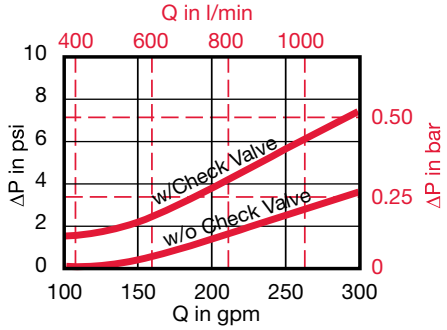

Element K Factors

$$\Delta P \text{ Elements} = \text{Elements (K) Flow Factor (From Tables Below)} \times \text{Flow Rate (gpm)} \times \frac{\text{Actual Viscosity (SUS)}}{141 \text{ SUS}} \times \frac{\text{Actual Specific Gravity}}{0.86}$$

Betamicron	...R...BN4HC			
Size	3 µm	5 µm	10 µm	20 µm
0975 R XXX BN4HC	0.050	0.040	0.030	0.020
1100 R XXX BN4HC	0.030	0.020	0.020	0.010

Sustainmicron	...R...SN Elements			
Size	3 µm	5 µm	10 µm	20 µm
0050 R XXX SN	N.A	N.A	0.4858	N.A
0075 R XXX SN	0.6121	0.5815	0.2996	0.1706
0090 R XXX SN	0.5446	0.4388	0.2707	0.1457
0165 R XXX SN	0.3730	0.3544	0.1826	0.1040
0185 R XXX SN	0.2482	0.2358	0.1215	0.0634
0210 R XXX SN	0.1292	0.1228	0.0663	0.0408
0270 R XXX SN	0.0836	0.0794	0.0429	0.0264
0330 R XXX SN	0.1771	0.1388	0.0692	0.0455
0500 R XXX SN	0.1158	0.0966	0.0510	0.0297
0660 R XXX SN	0.0852	0.0632	0.0324	0.0196
0850 R XXX SN	0.0662	0.0523	0.0279	0.0152

ECOmicron	...R...ECON2			
Size	3 µm	5 µm	10 µm	20 µm
0090 R XXX ECON2	0.818	0.554	0.368	0.176
0150 R XXX ECON2	0.488	0.329	0.220	0.104
0165 R XXX ECON2	0.615	0.428	0.247	0.132
0185 R XXX ECON2	0.488	0.335	0.181	0.099
0195 R XXX ECON2	0.362	0.247	0.132	0.071
0330 R XXX ECON2	0.230	0.148	0.093	0.066
0500 R XXX ECON2	0.165	0.104	0.071	0.044
0660 R XXX ECON2	0.104	0.066	0.044	0.027
0850 R XXX ECON2	0.082	0.055	0.038	0.022

Mobilemicron	...R...MM		
Size	8 µm	10 µm	15 µm
0075 R XXX MM	0.265	0.265	0.166
0090 R XXX MM	0.252	0.252	
0150 R XXX MM	0.114	0.114	0.071
0165 R XXX MM	0.146	0.146	0.091
0185 R XXX MM	0.108	0.108	0.068
0210 R XXX MM	0.052	0.052	0.032
0270 R XXX MM	0.032	0.032	0.020
0330 R XXX MM	0.078	0.078	0.049
0500 R XXX MM	0.052	0.052	0.032
0660 R XXX MM	0.030	0.030	0.019
0850 R XXX MM	0.023	0.023	0.014

Betamicron/Aquamicron	...R...BN4AM	
Size	3 µm	10 µm
0330 R XXX BN4AM	0.477	0.165
0500 R XXX BN4AM	0.313	0.11
0660 R XXX BN4AM	0.192	0.066
0850 R XXX BN4AM	0.154	0.049

Aquamicron	...R...AM
Size	40 µm
0330 R 040 AM	0.115
0500 R 040 AM	0.076
0660 R 040 AM	0.051
0850 R 040 AM	0.040

Wire Mesh	...R...W/HC
Size	25, 50, 100, 200 µm
0075 R XXX W/HC	0.020
0090 R XXX W/HC	0.017
0150 R XXX W/HC	0.010
0165 R XXX W/HC	0.011
0185 R XXX W/HC	0.050
0195 R XXX W/HC	0.037
0210 R XXX W/HC	0.004
0270 R XXX W/HC	0.002
0330 R XXX W/HC	0.011
0500 R XXX W/HC	0.007
0660 R XXX W/HC	0.004
0850 R XXX W/HC	0.003

Polyester	...R...P/HC	
Size	10 µm	20 µm
0075 R XXX P/HC	0.071	0.036
0090 R XXX P/HC	0.058	0.029
0150 R XXX P/HC	0.040	0.017
0165 R XXX P/HC	0.033	0.016
0185 R XXX P/HC	0.029	0.016
0195 R XXX P/HC	0.018	0.009
0210 R XXX P/HC	0.018	0.010
0270 R XXX P/HC	0.009	0.004
0330 R XXX P/HC	0.016	0.008
0500 R XXX P/HC	0.011	0.005
0660 R XXX P/HC	0.008	0.004
0850 R XXX P/HC	0.007	0.003

S.S. Wire Mesh "R"	...R...V US UNITS			
Size	3 µm	5 µm	10 µm	20 µm
0330 R XXX V	0.115	0.093	0.060	0.044
0500 R XXX V	0.082	0.066	0.044	0.027
0660 R XXX V	0.055	0.044	0.033	0.022
0850 R XXX V	0.044	0.033	0.022	0.016

All Element K Factors in psi / gpm.